HIGHLAND
PRODUCTS GROUP LLC

Specifications for item 133-1029

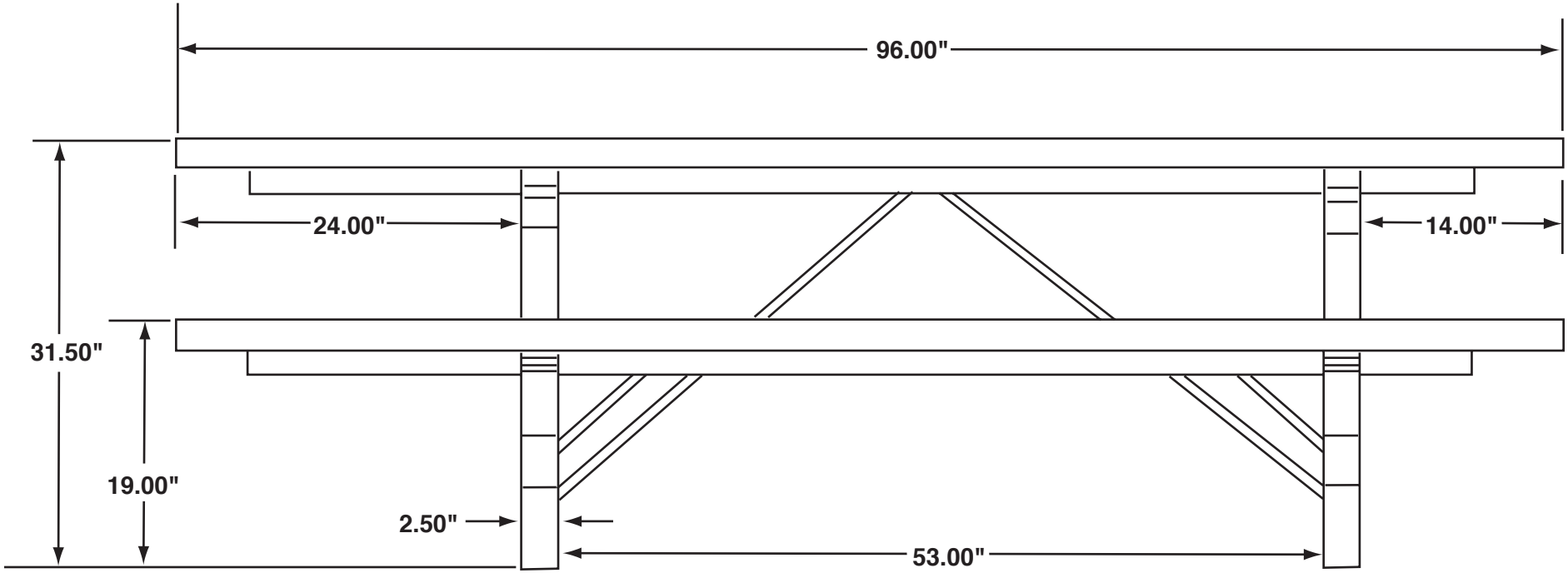

3350 NW Boca Raton Blvd., Suite B2 Boca Raton, FL, 33431
Phone: 561.620.7878 Fax: 561.620.8668

HIGHLAND
PRODUCTS GROUP LLC

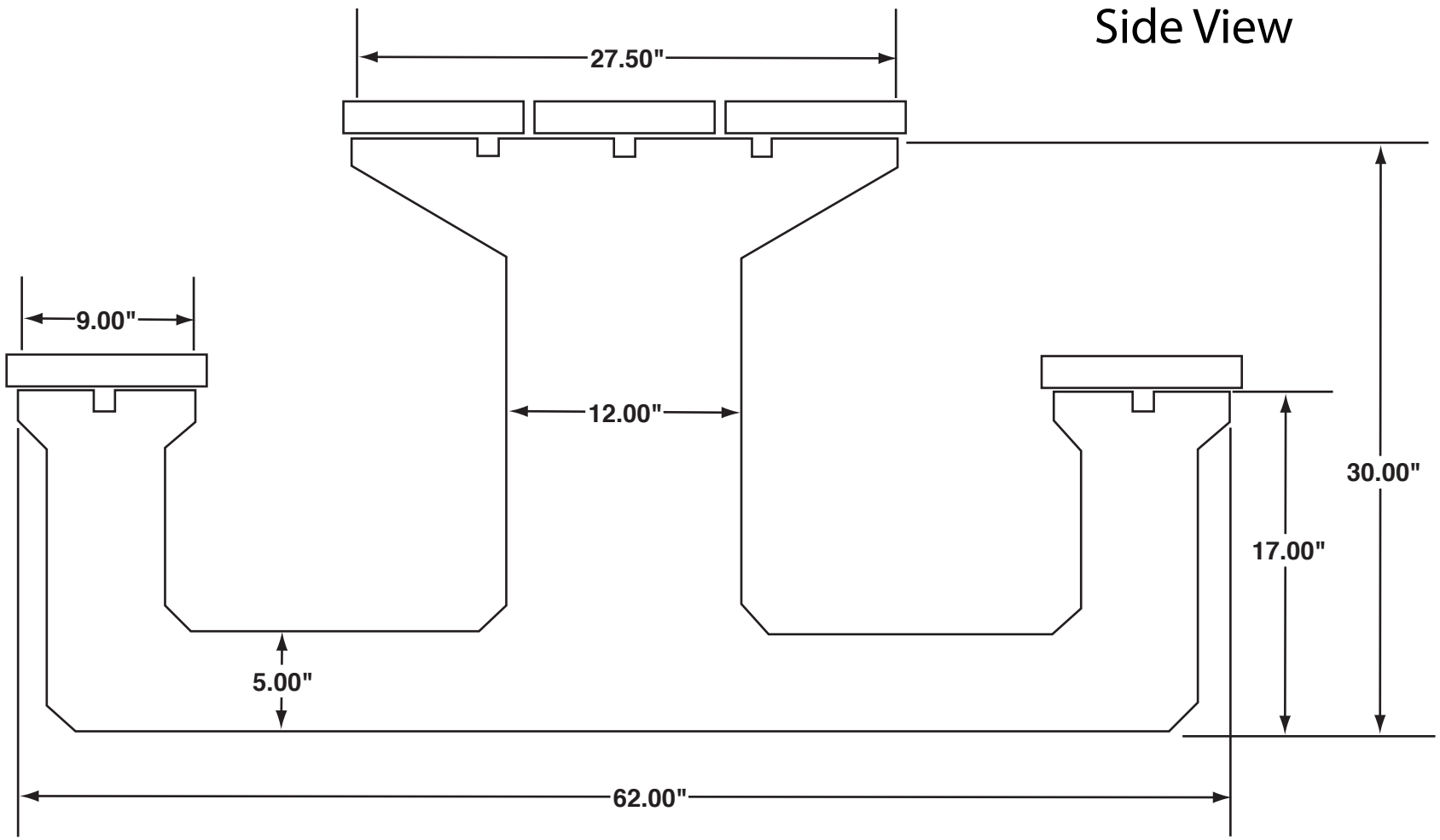

3350 NW Boca Raton Blvd., Suite B2 Boca Raton, FL, 33431
Phone: 561.620.7878 Fax: 561.620.8668